LEVITASK

VISION X

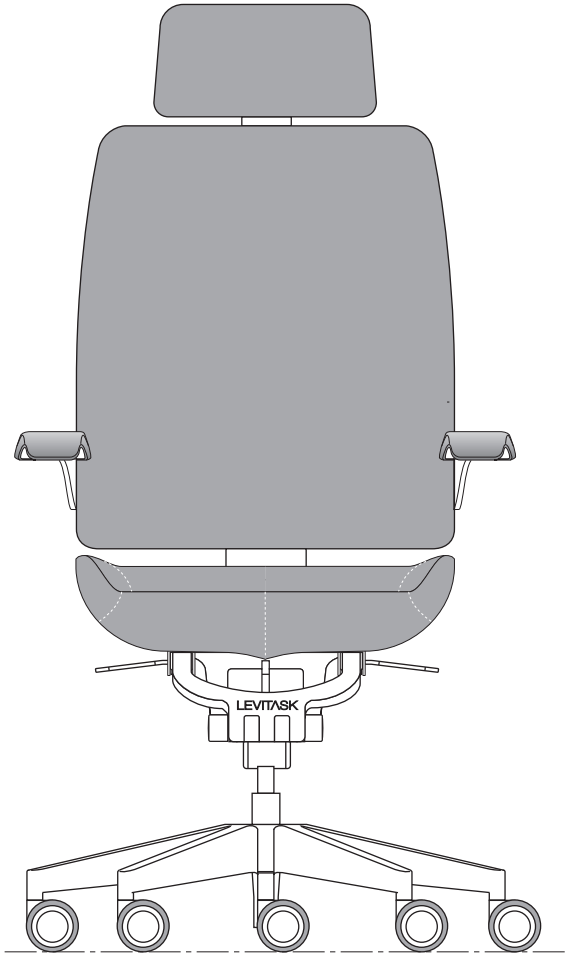

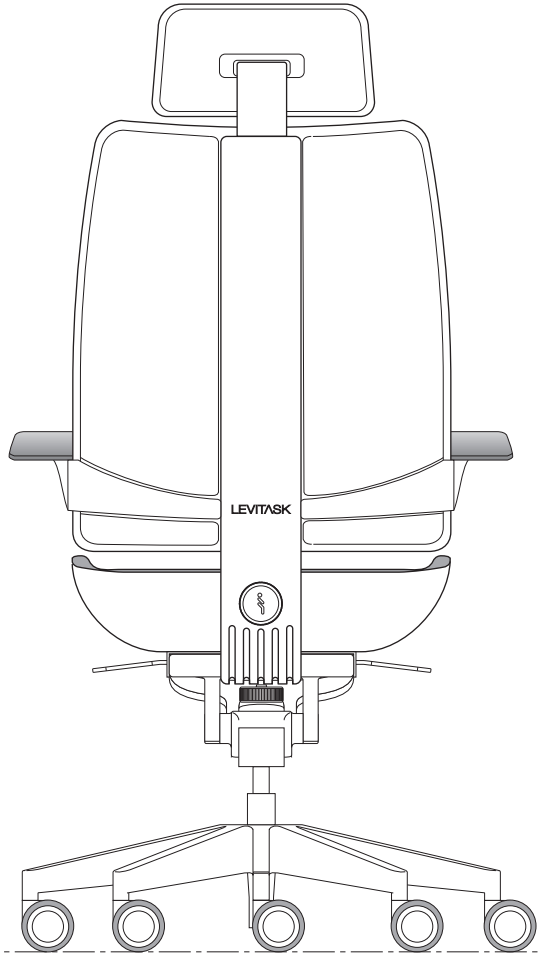

VX FUNCTION

FRONT VIEW - REAR VIEW

LEVITASK

VISION X

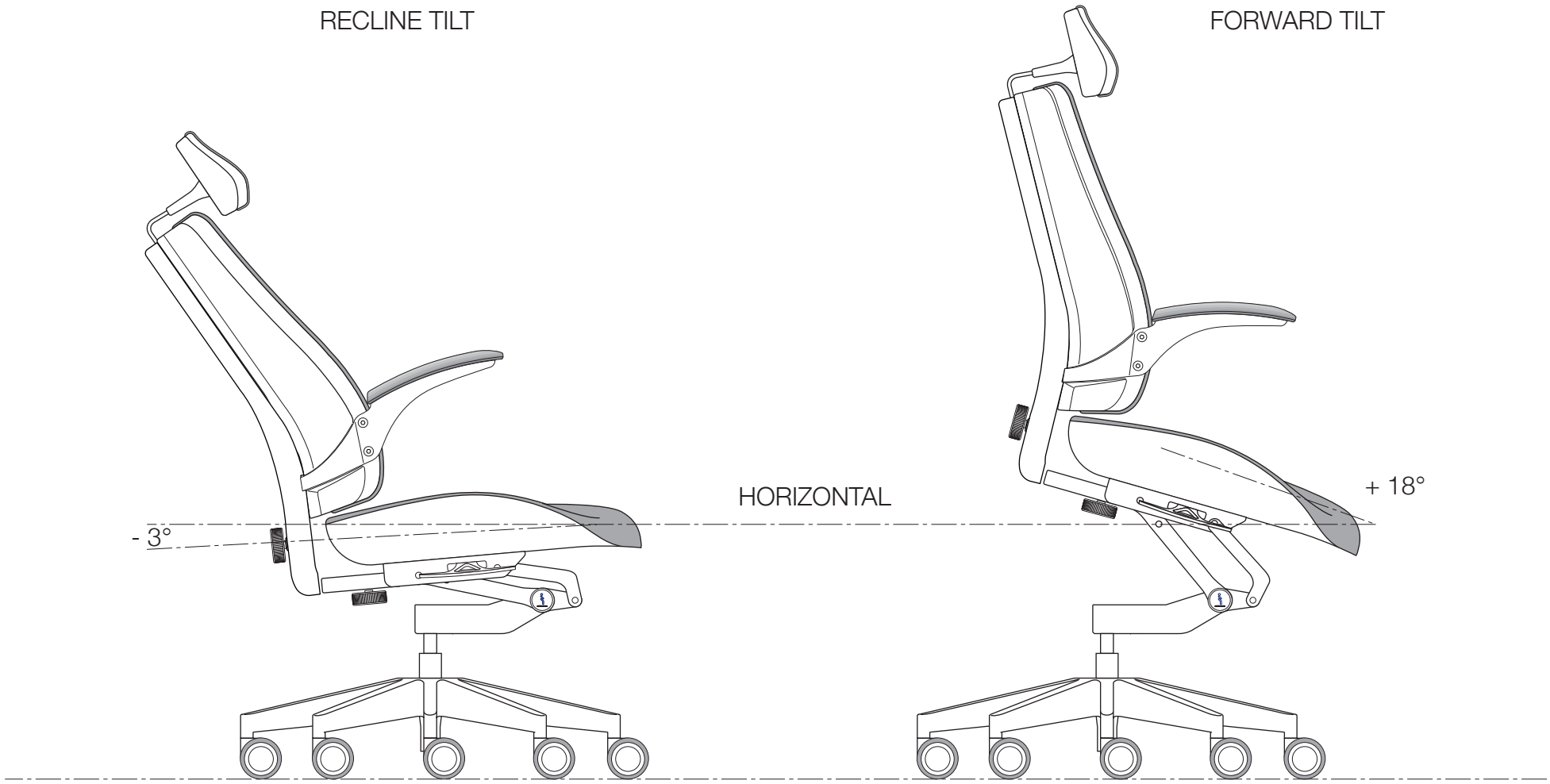

VX FUNCTION - 1

SEAT TILT RANGE

LEVITASK

VISION X

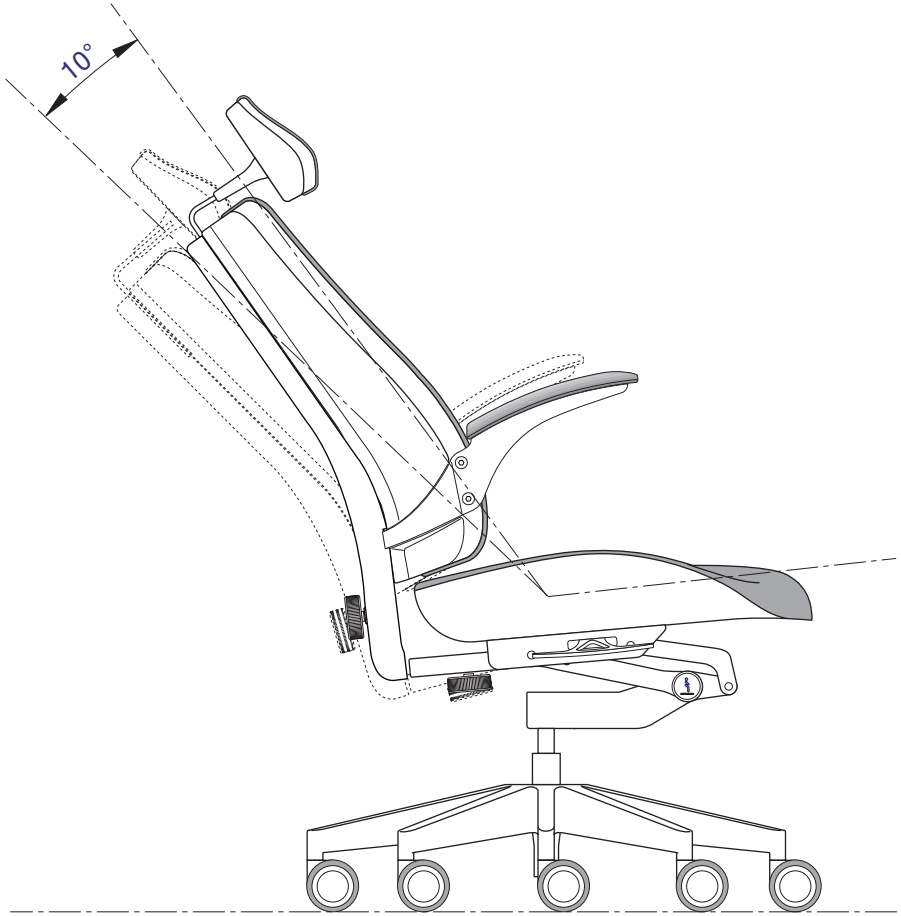

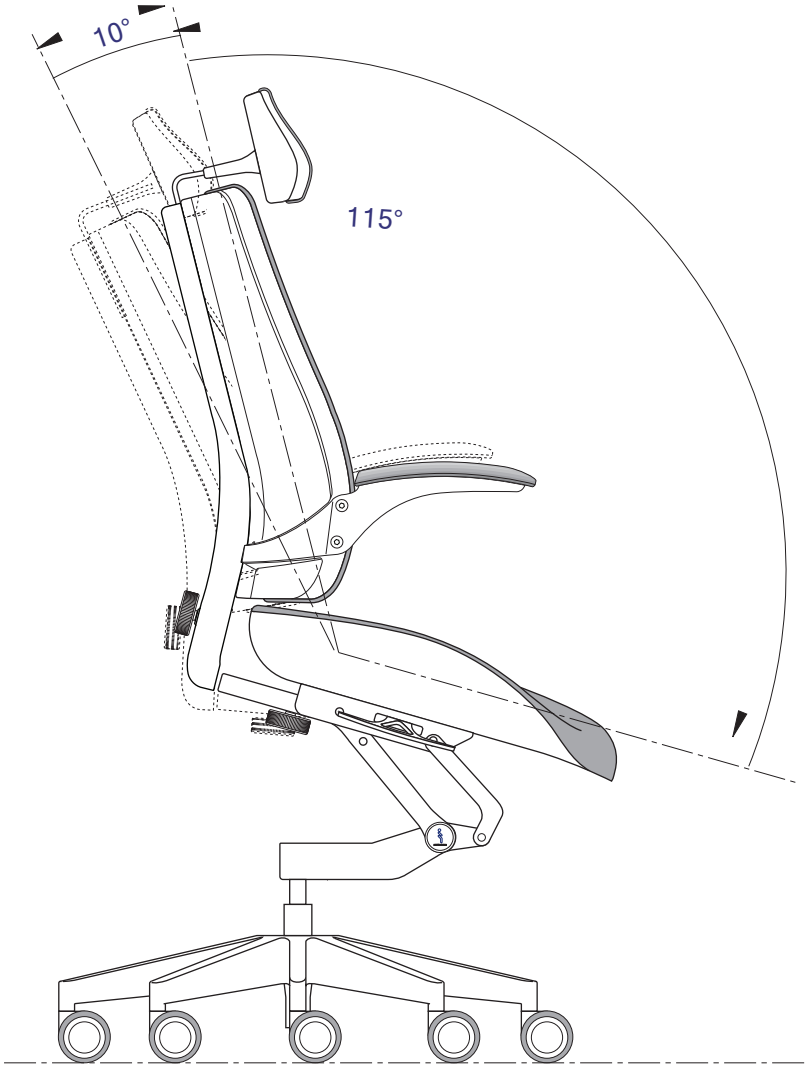

VX FUNCTION - 2

BACKREST SPRING

LEVITASK

VISION X

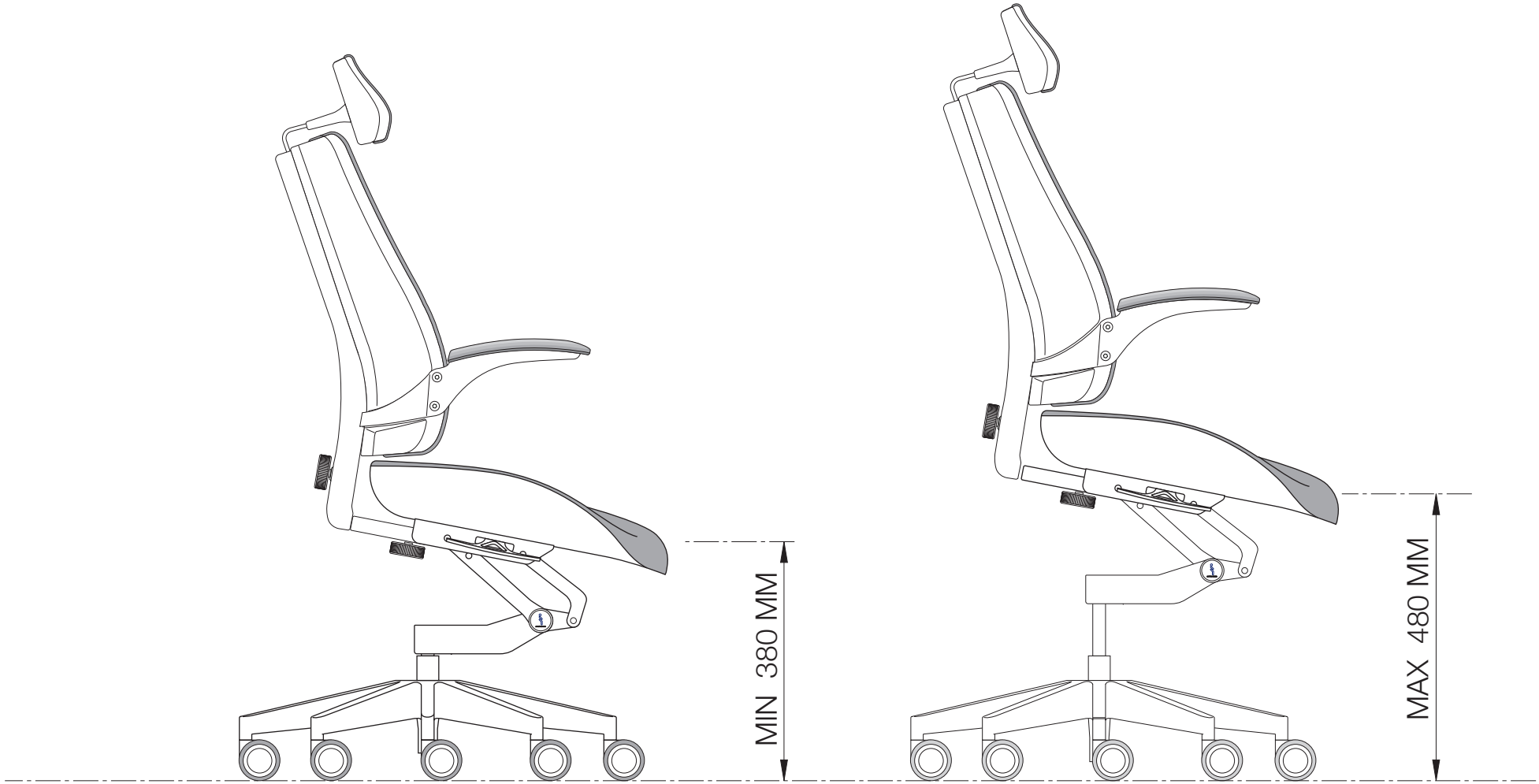

VX FUNCTION - 3

STANDARD ADJUSTABLE SEAT HEIGHT

LEVITASK

VISION X

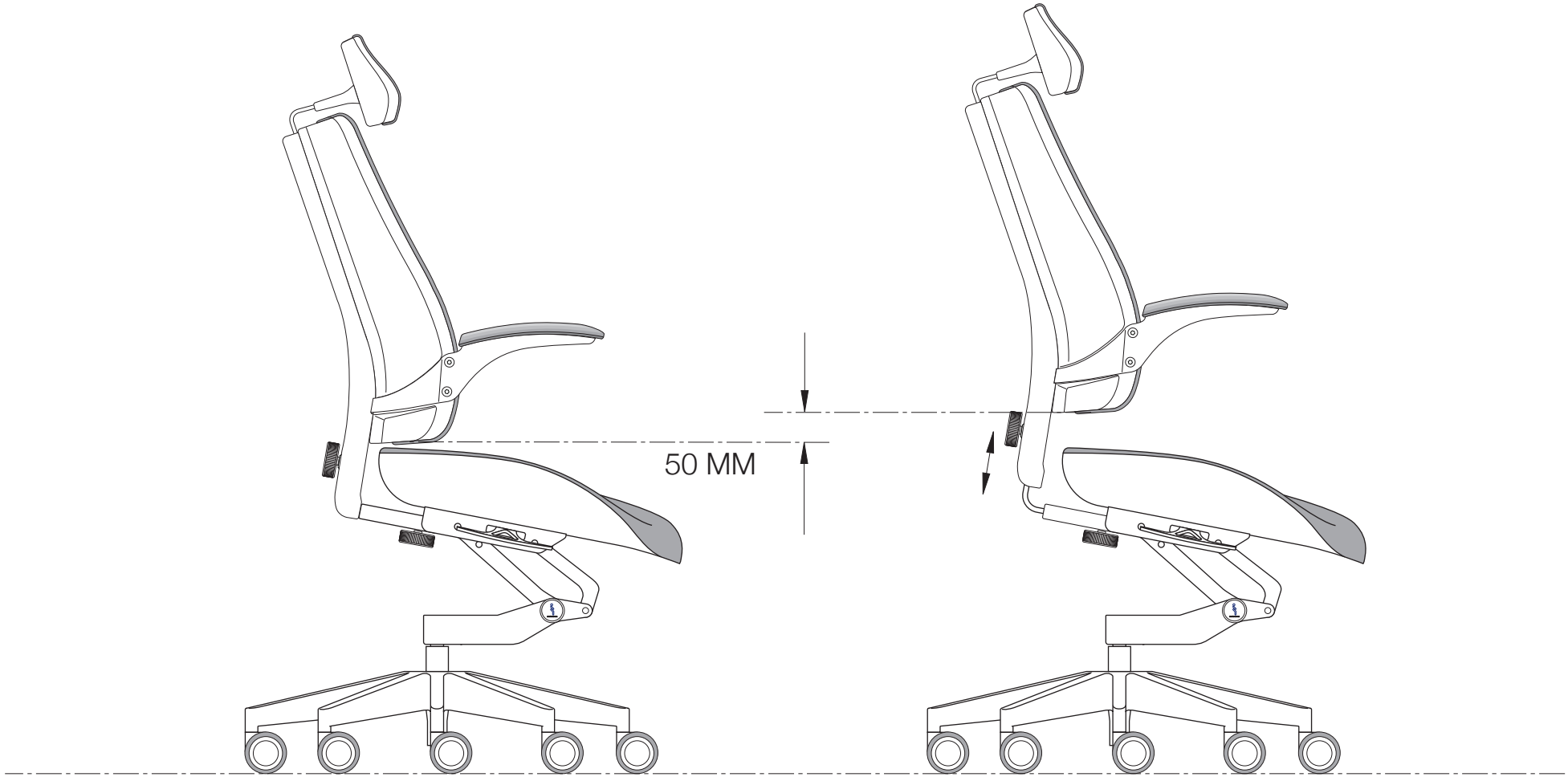

VX FUNCTION - 4

ADJUSTABLE BACKREST HEIGHT

LEVITASK

VISION X

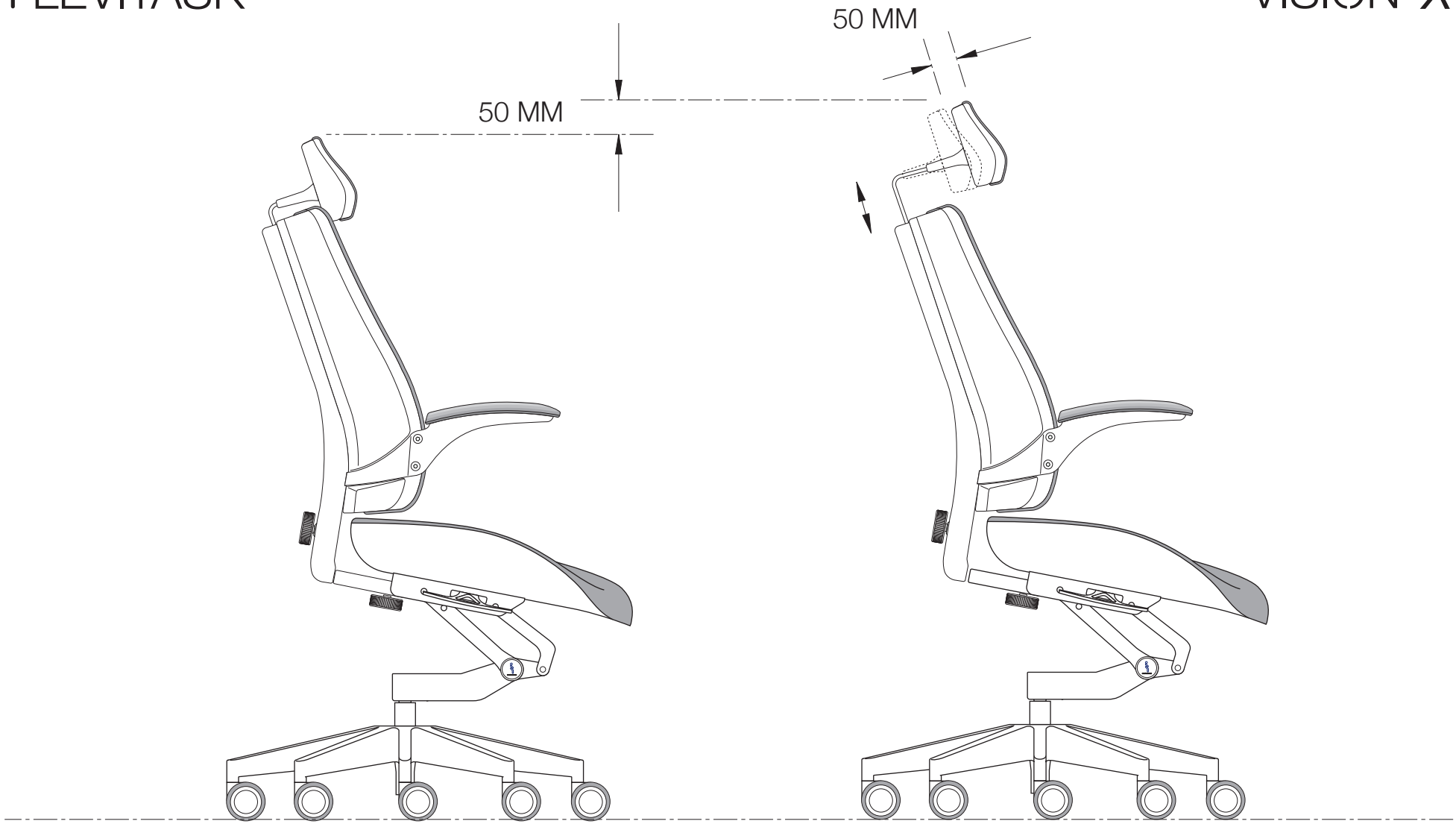

VX FUNCTION - 5

ADJUSTABLE HEAD REST HEIGHT & DEPTH

LEVITASK

VISION X

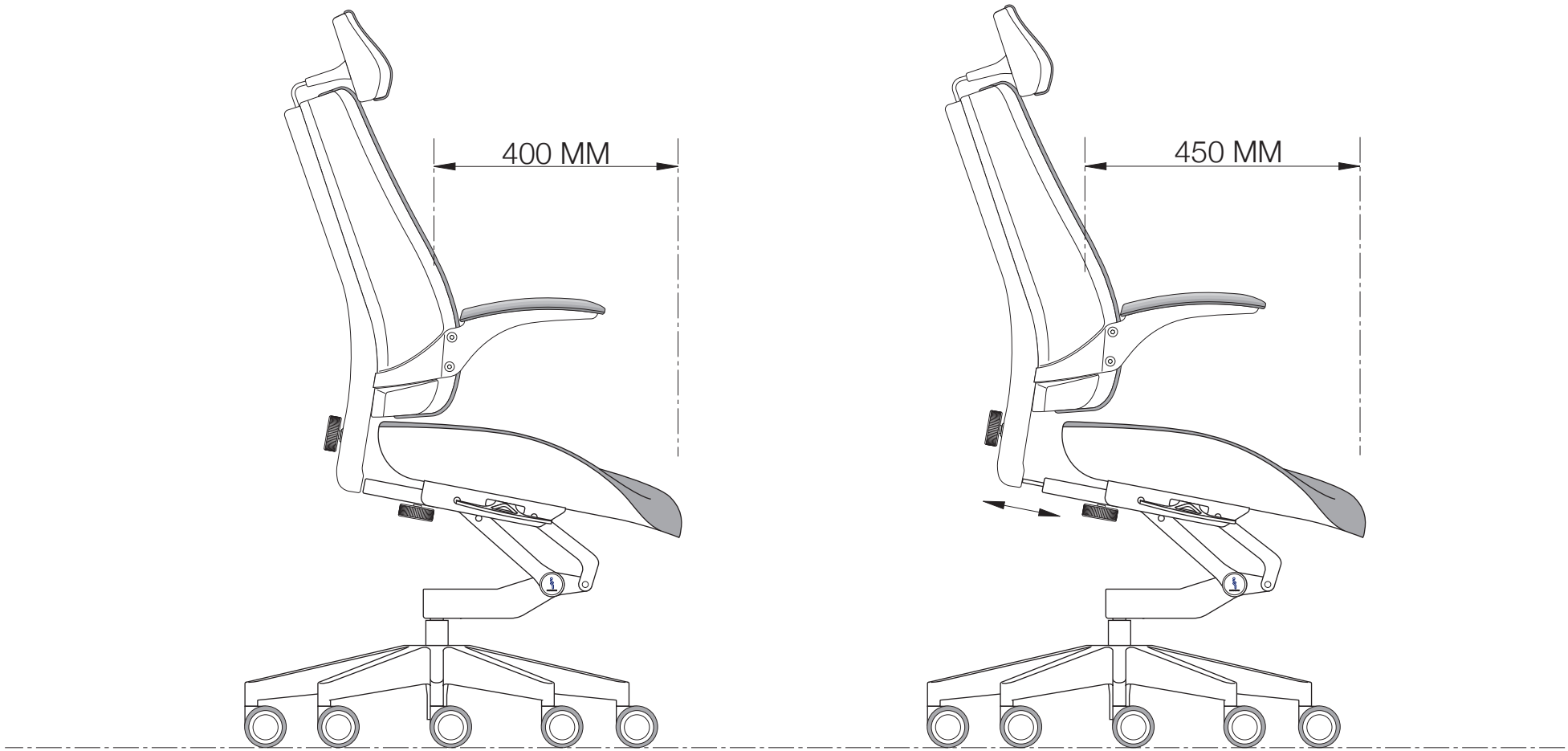

VX FUNCTION - 6

ADJUSTABLE SEAT DEPTH

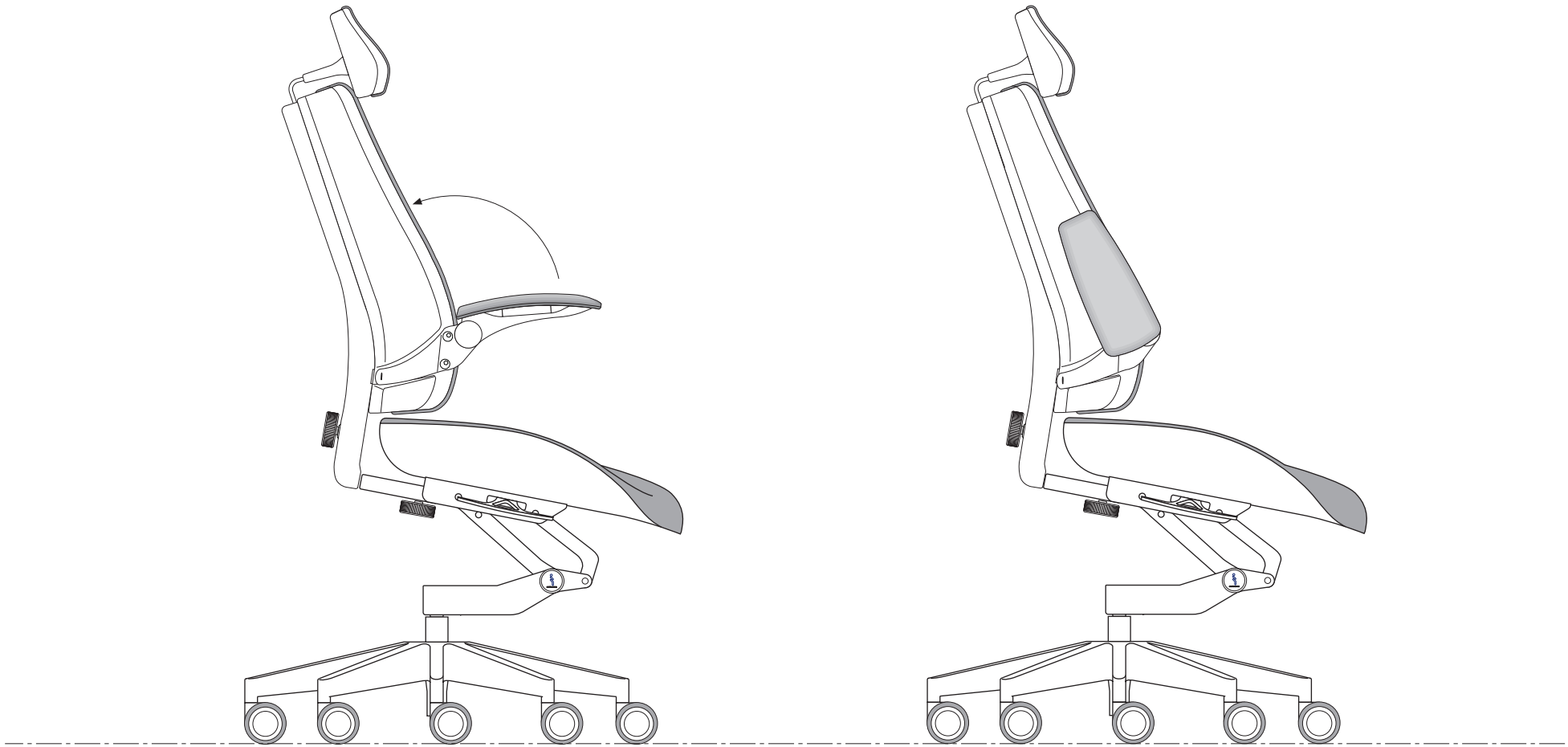

VII FUNCTION - 7

FOLDABLE ARMREST

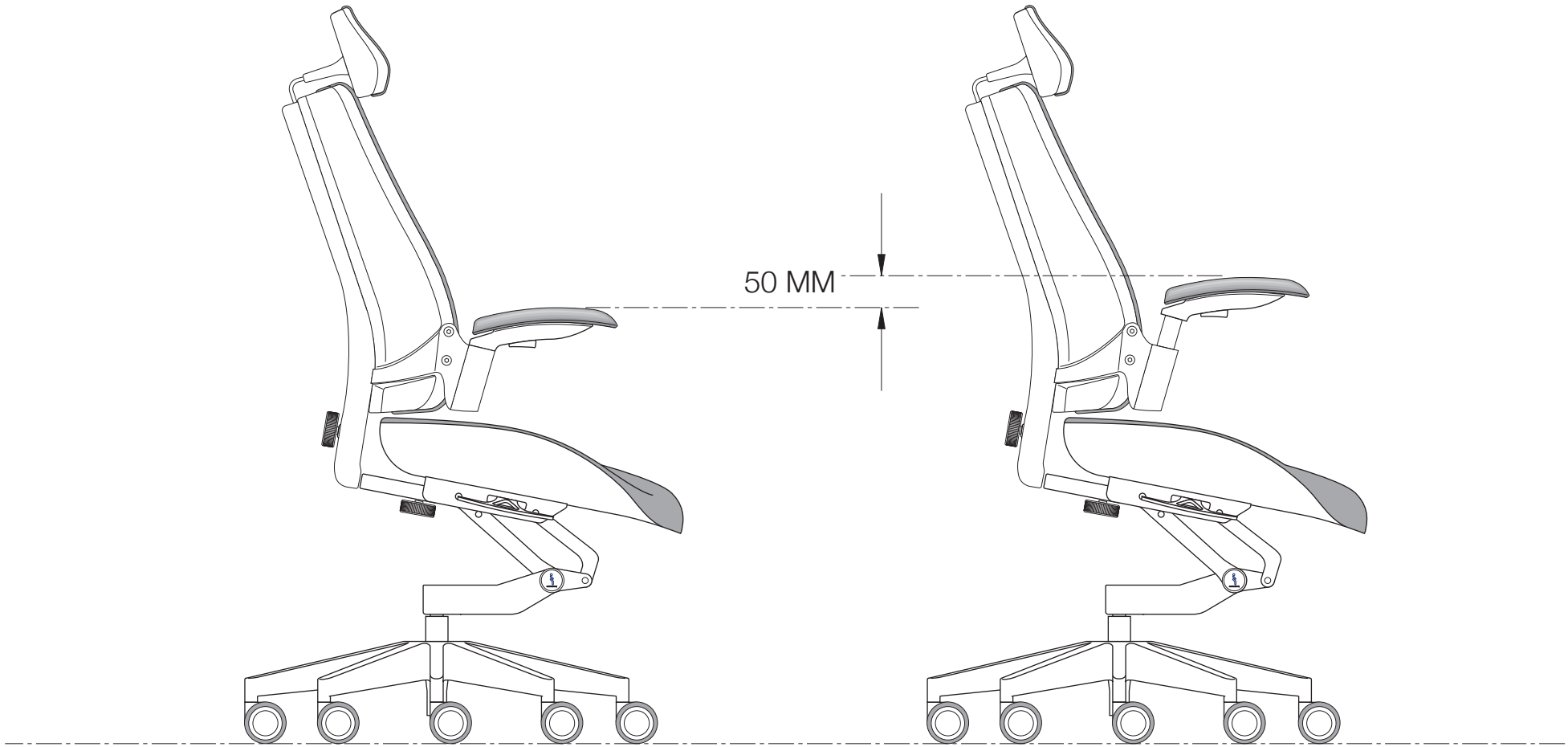

VII FUNCTION - 8

HEIGHT ADJUSTABLE ARMREST

LEVITASK

VISION X

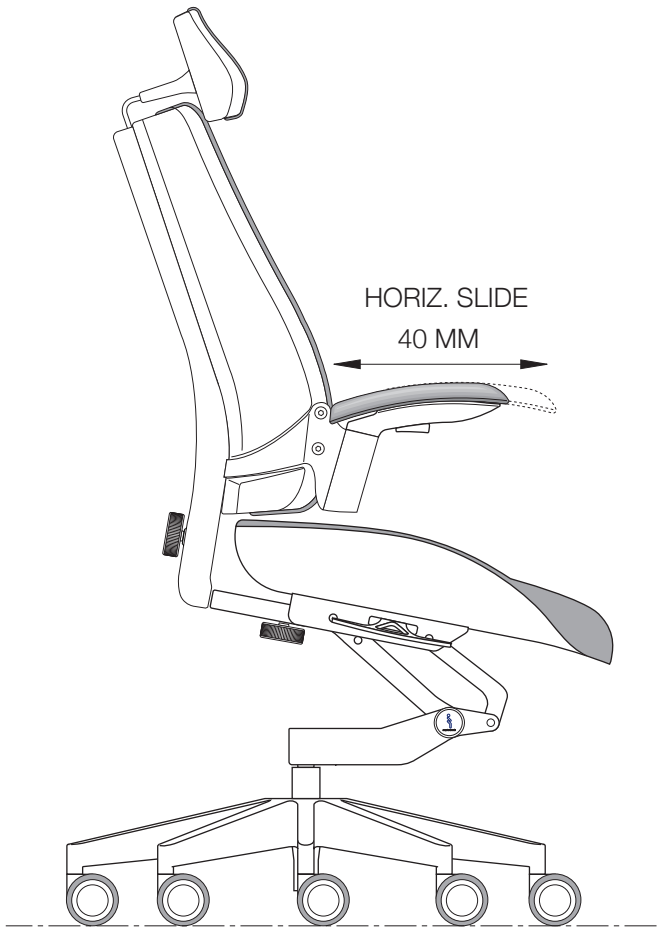

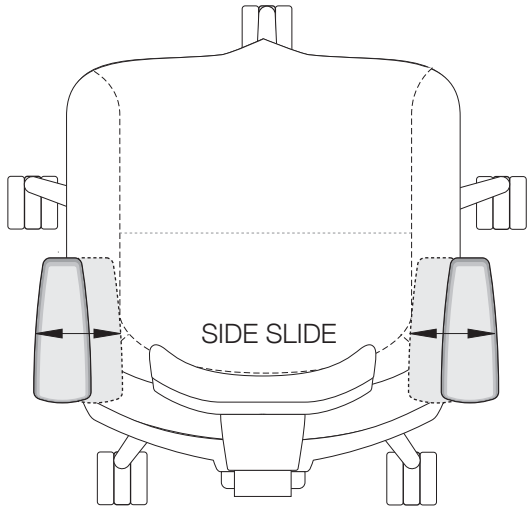

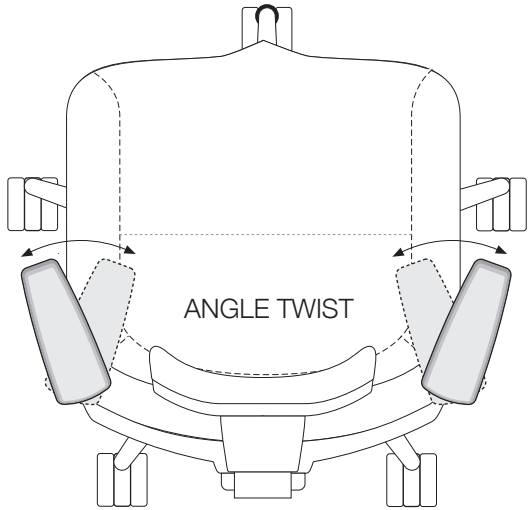

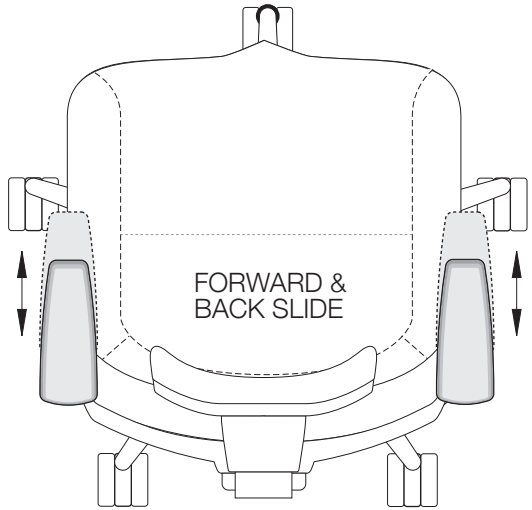

VII FUNCTION - 9

ARMPAD SLIDES

LEVITASK

VISION Y

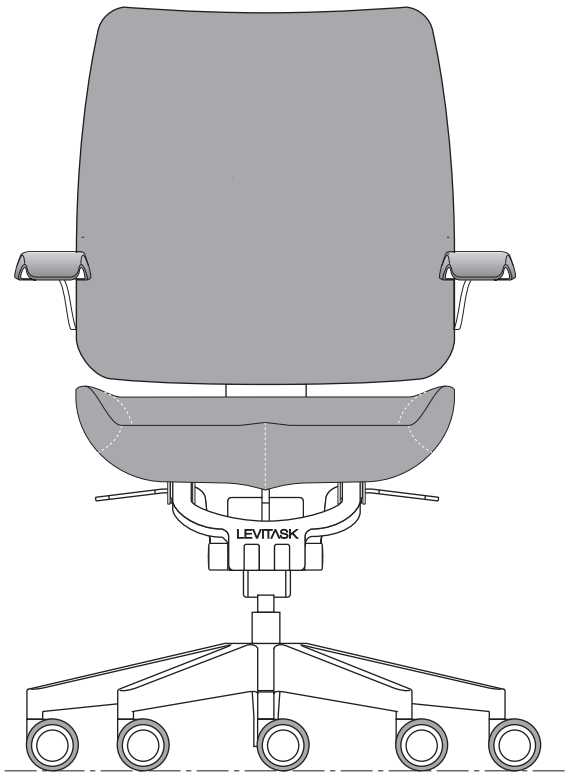

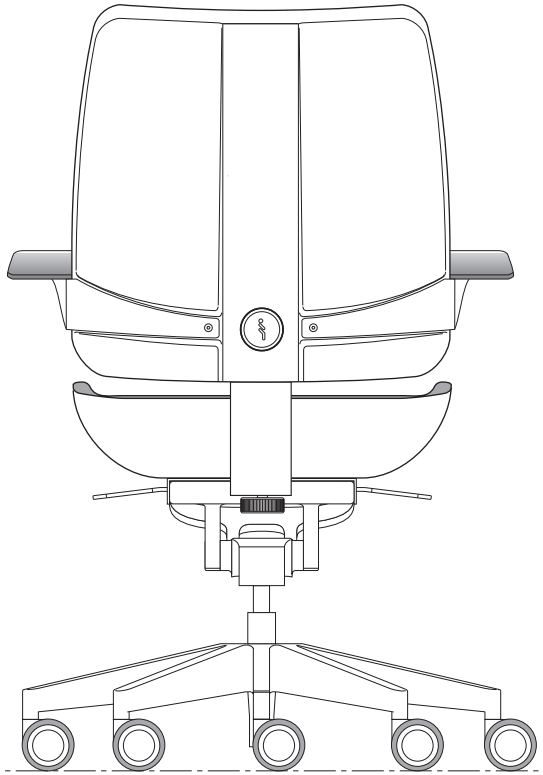

VY FUNCTION

FRONT VIEW - REAR VIEW

LEVITASK

VISION Y

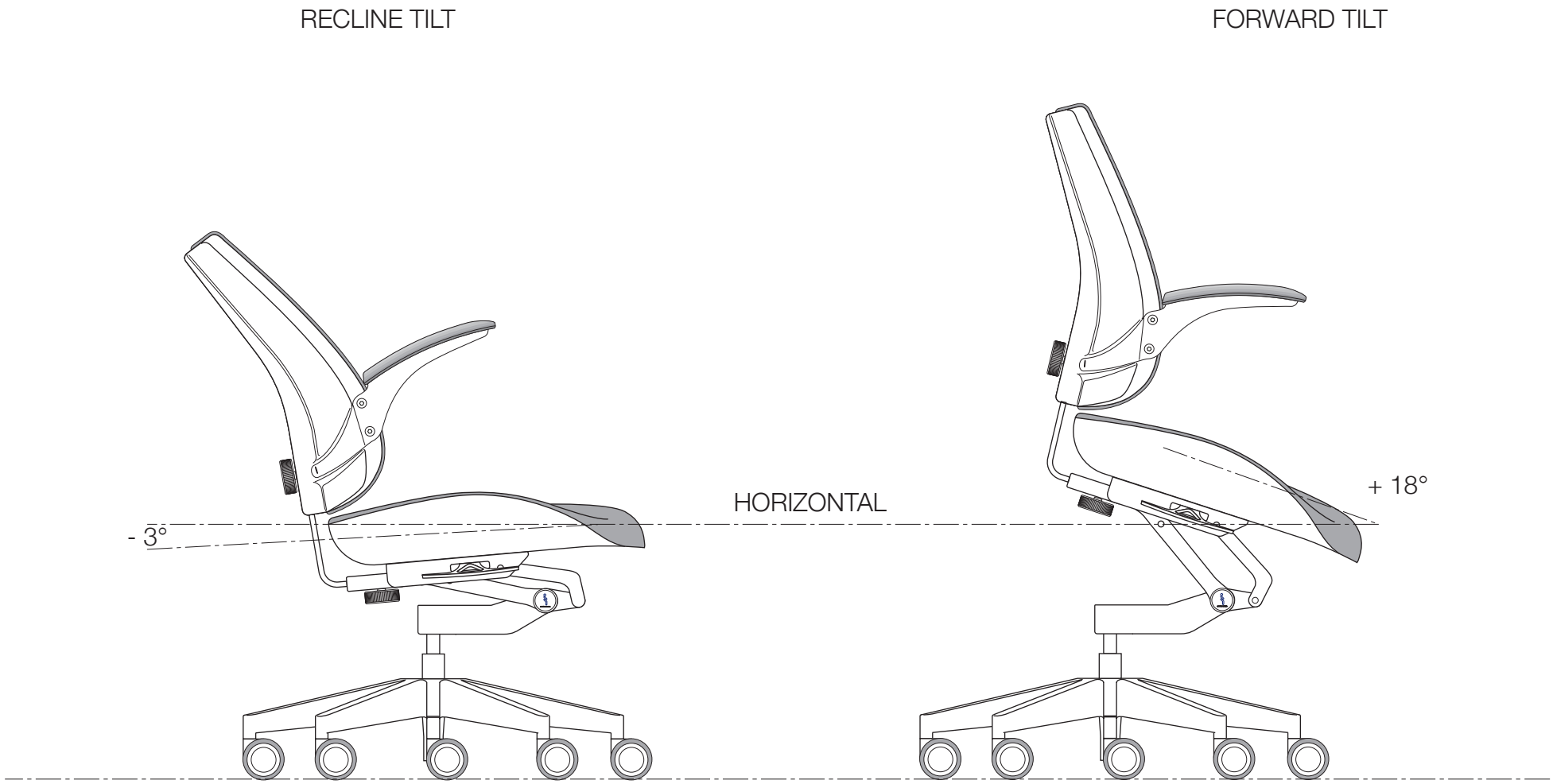

VY FUNCTION - 1

SEAT TILT RANGE

LEVITASK

VISION Y

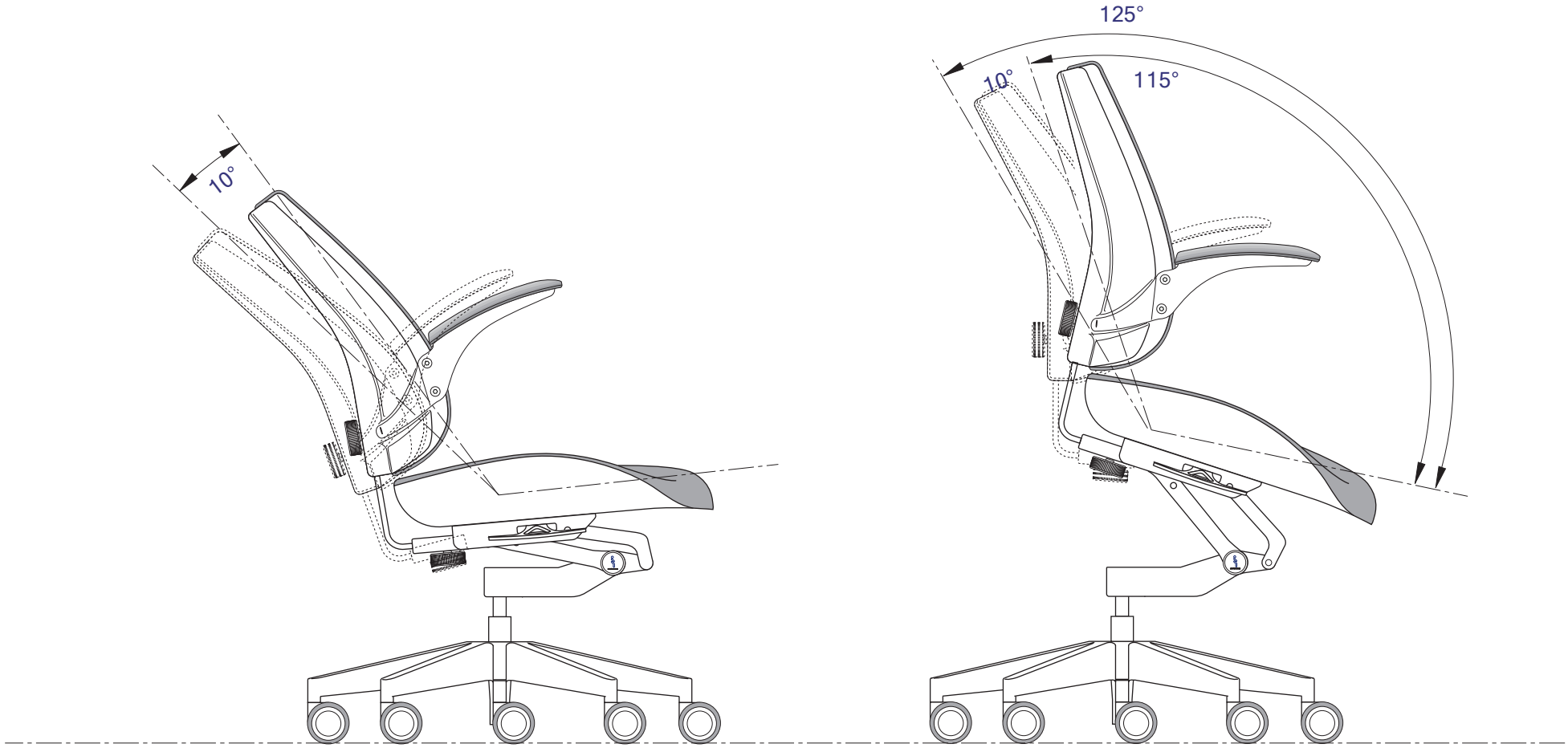

VY FUNCTION - 2

BACKREST SPRING

LEVITASK

VISION Y

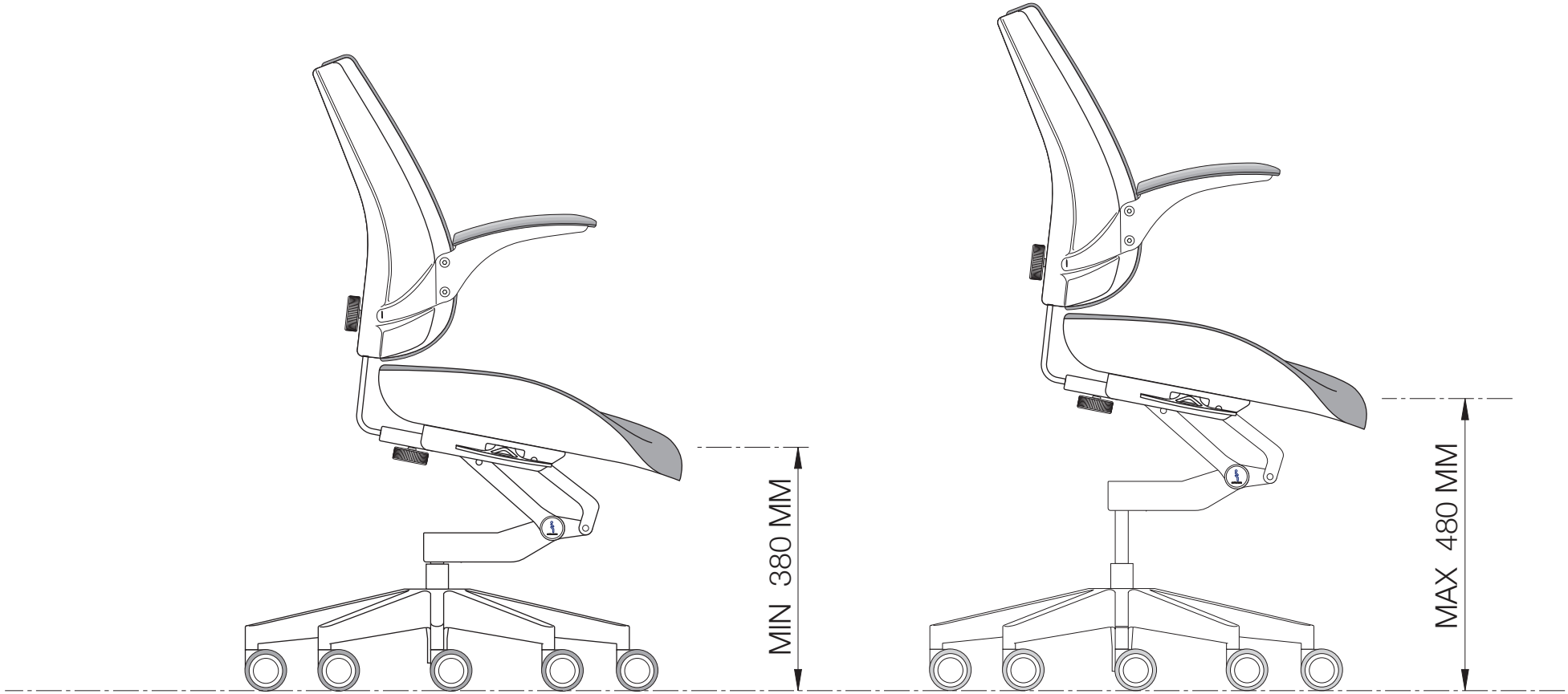

VY FUNCTION - 3

STANDARD ADJUSTABLE SEAT HEIGHT

LEVITASK

VISION Y

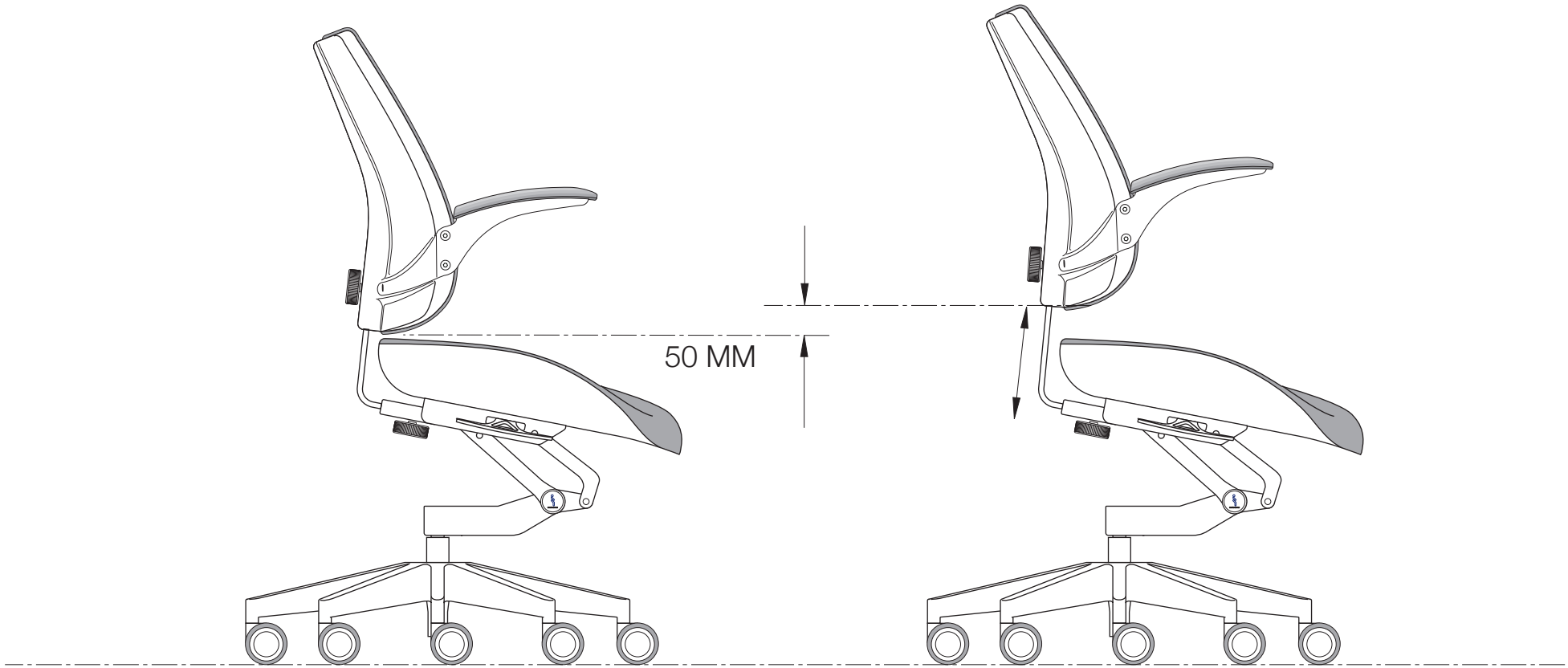

VY FUNCTION - 4

ADJUSTABLE BACKREST HEIGHT

LEVITASK

VISION Y

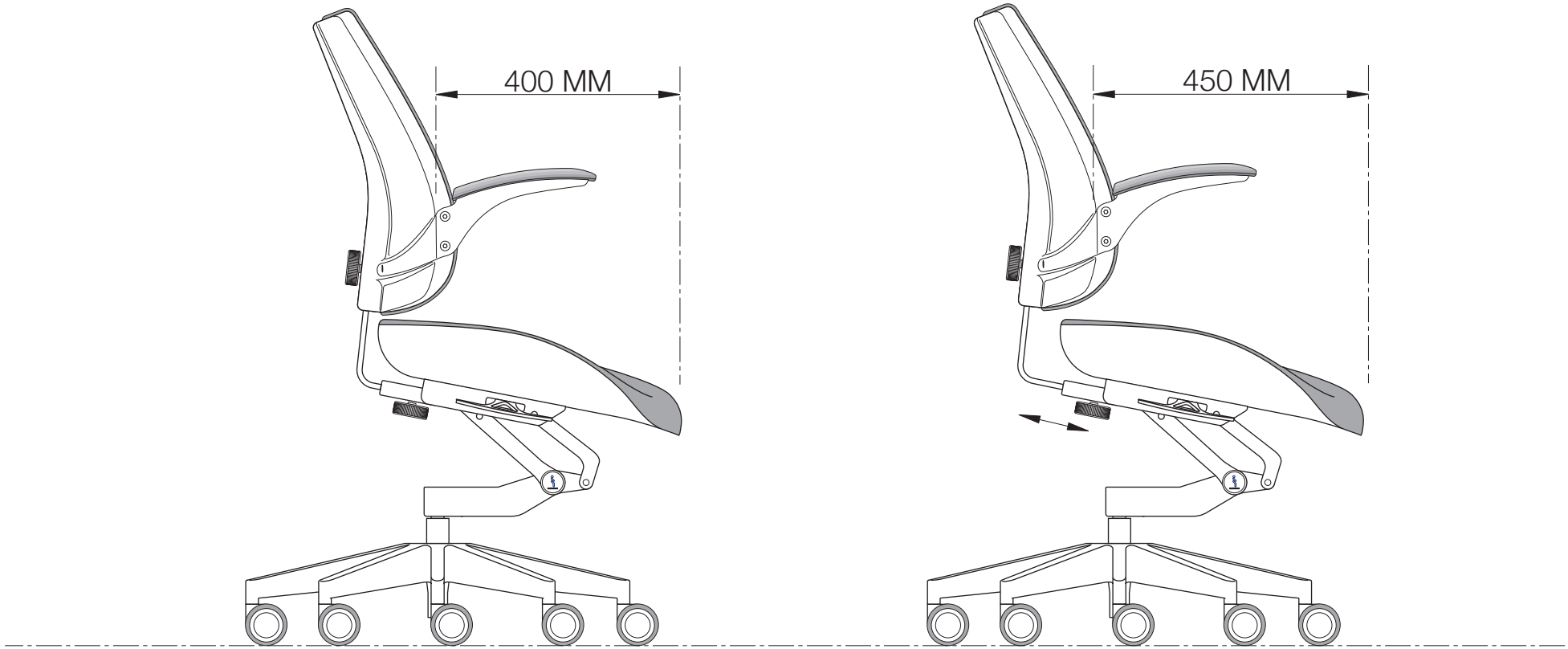

VY FUNCTION - 5

ADJUSTABLE SEAT DEPTH

LEVITASK

VISION Y

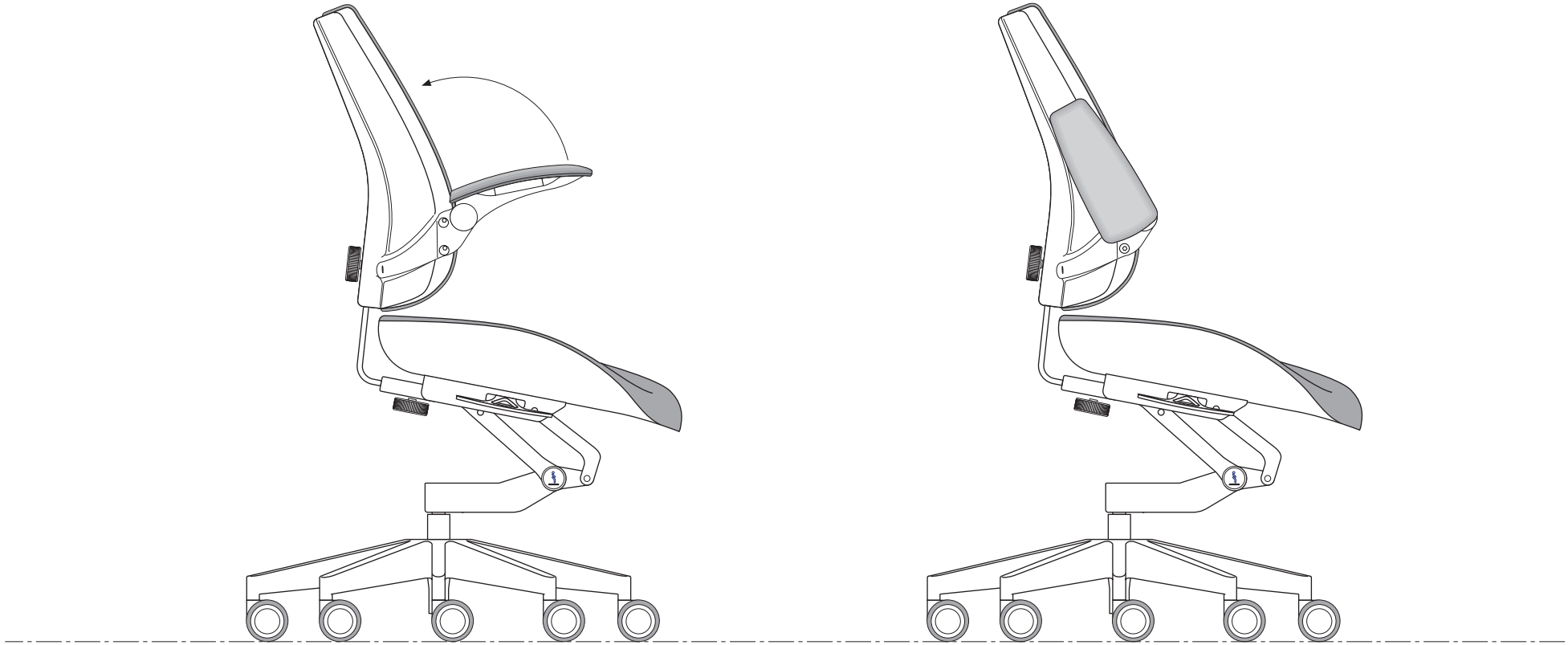

VY FUNCTION - 6

FOLDABLE ARMREST

LEVITASK

VISION Y

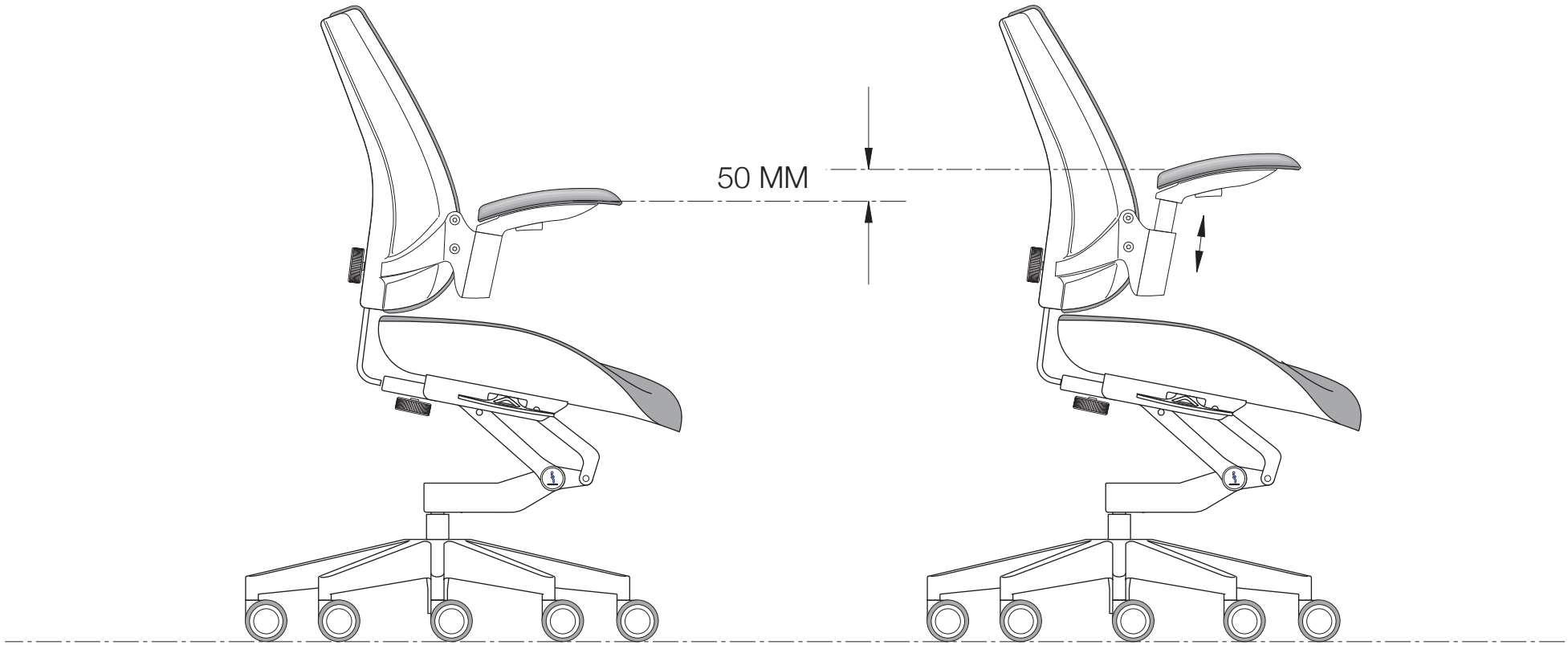

VY FUNCTION - 7

HEIGHT ADJUSTABLE ARMREST

LEVITASK

VISION X

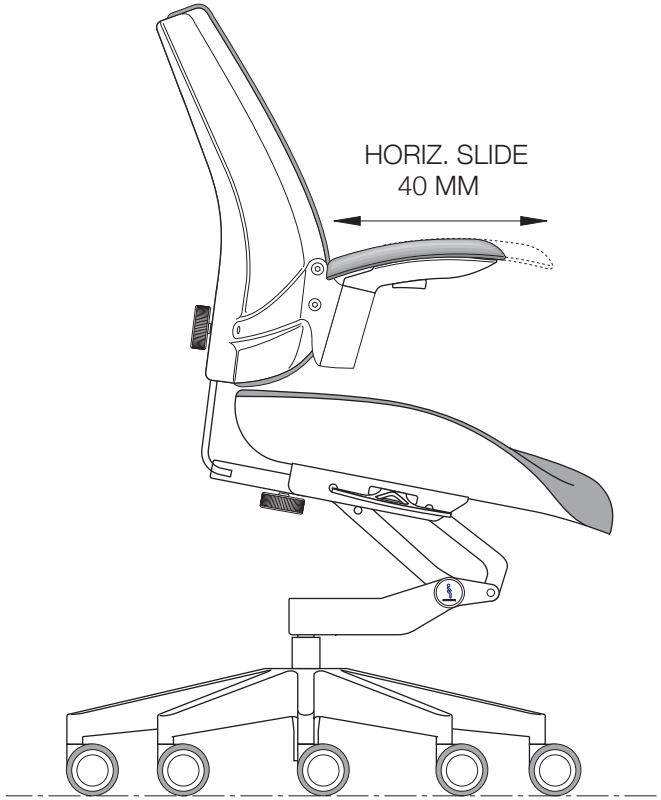

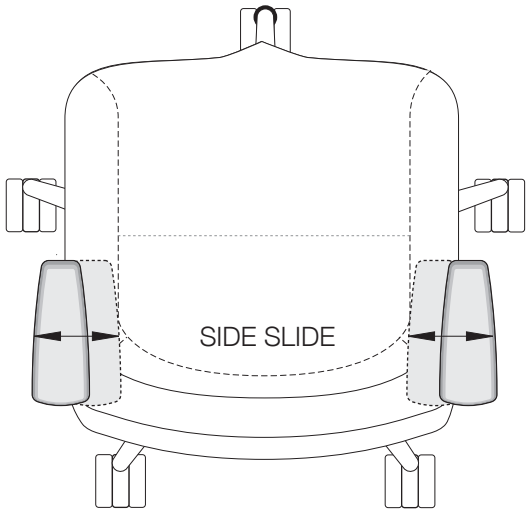

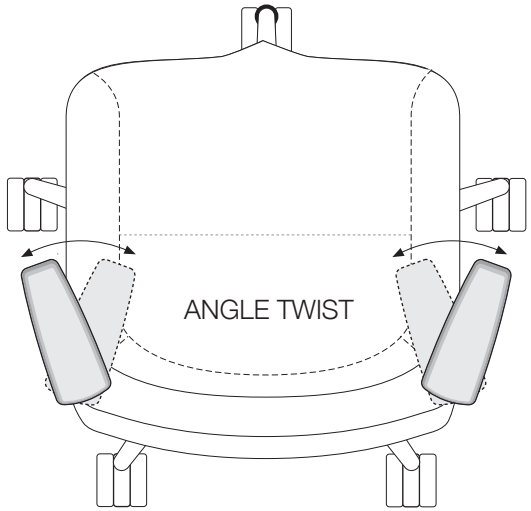

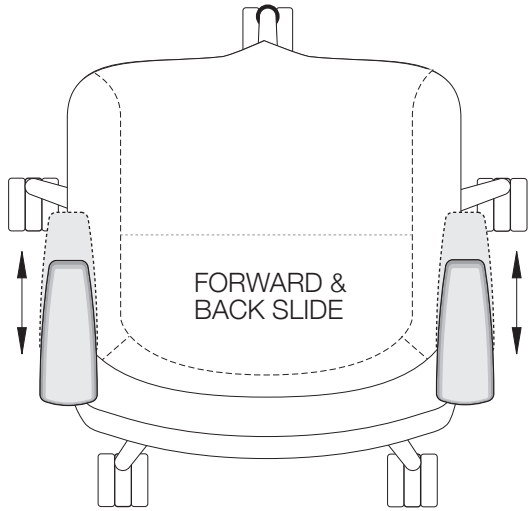

VY FUNCTION - 8

ARMPAD SLIDES